Light Crane Systems

- Steel Cranes
- Stainless Steel Cranes 304/316
- Aluminium Cranes

NIKO ... Quality in Motion

www.niko.eu.com

NIKO Light Cranes – A versatile and economic solution for loads up to 2.000 kg and 10 meter bridge length!

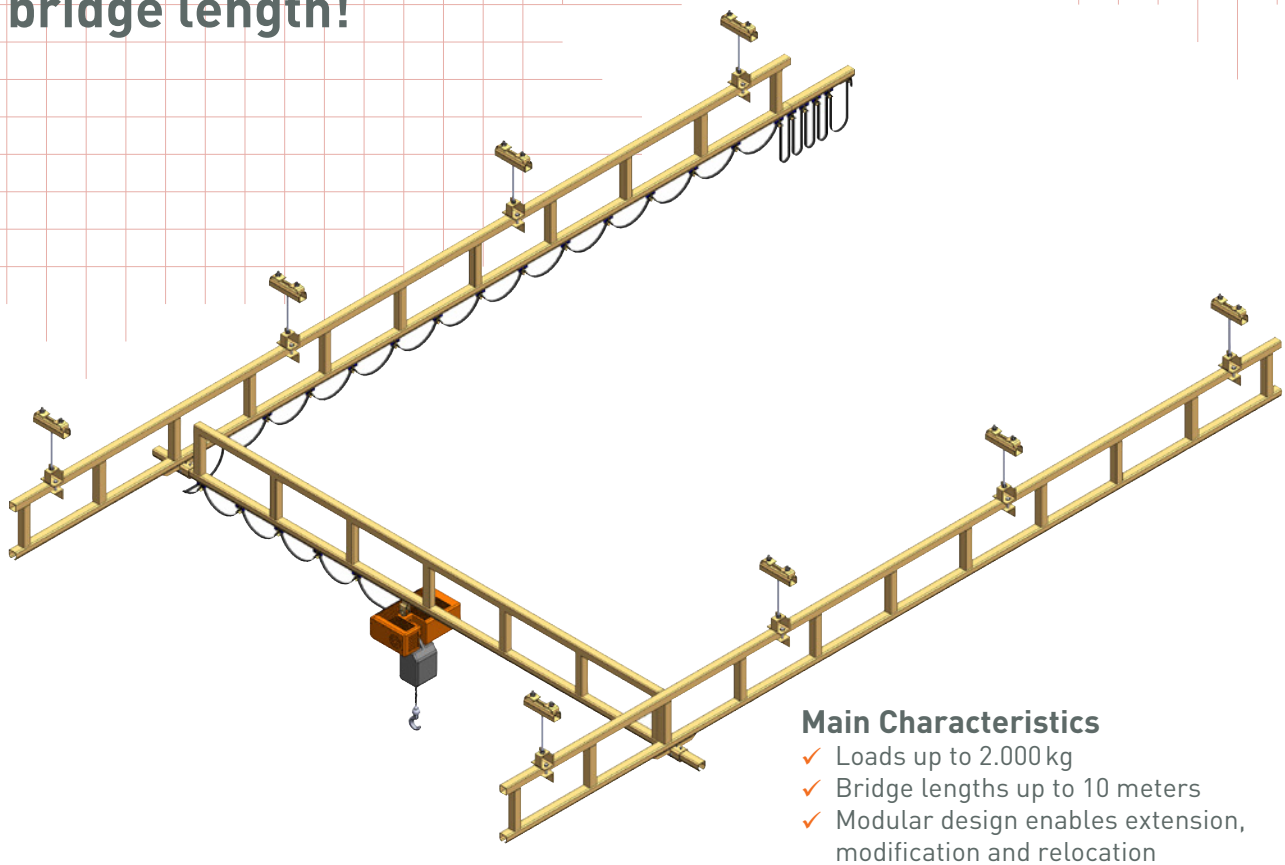

Main Characteristics

- ✓ Loads up to 2.000 kg
- ✓ Bridge lengths up to 10 meters
- ✓ Modular design enables extension, modification and relocation
- ✓ Cost effective
- ✓ Easy to install using a variety of supporting brackets.
- ✓ Large range of mounting options
- ✓ Latching capability enables interconnection with existing or new conveyor or monorail systems
- ✓ Telescopic cantilever crane bridges and monorails
- ✓ Manual or electric travel
- ✓ Floor or ceiling mounted cranes.
- ✓ Gold/silver zinc or powder coated finish

NIKO Light Crane System provides an ergonomic and cost effective solution to conventional overhead crane systems, particularly when there is a height and space restriction. Versatile and reliable overhead handling can be achieved for a variety of applications using the NIKO modular design. The robust design of our components and the high standards of manufacturing guarantees long life with little or no maintenance requirements.

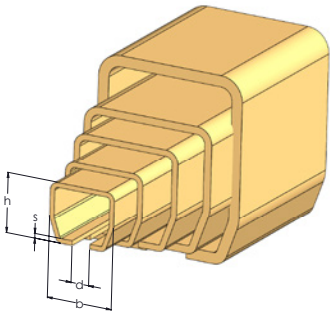

NIKO Profil No.	Dimensions			
	h (mm)	b (mm)	d (mm)	s (mm)
23.000	35,00	40,00	11,00	2,75
24.000	43,50	48,50	15,00	3,20
25.000	60,00	65,00	18,00	3,60
26.000	75,00	80,00	22,00	4,50
27.000	110,00	90,00	25,00	6,50

NIKO Track Profiles

The NIKO enclosed track tapered design ensures correct alignment of the trolleys and reduces the possibility of dust build up. This facilitates free and smooth running of the trolleys and a long life of the crane. NIKO light cranes require only 1-4% force to move the load being lifted. For use in aggressive environments we can also offer Niko Cranes in stainless steel grade 304 & 316.

Steel Light Crane specifications

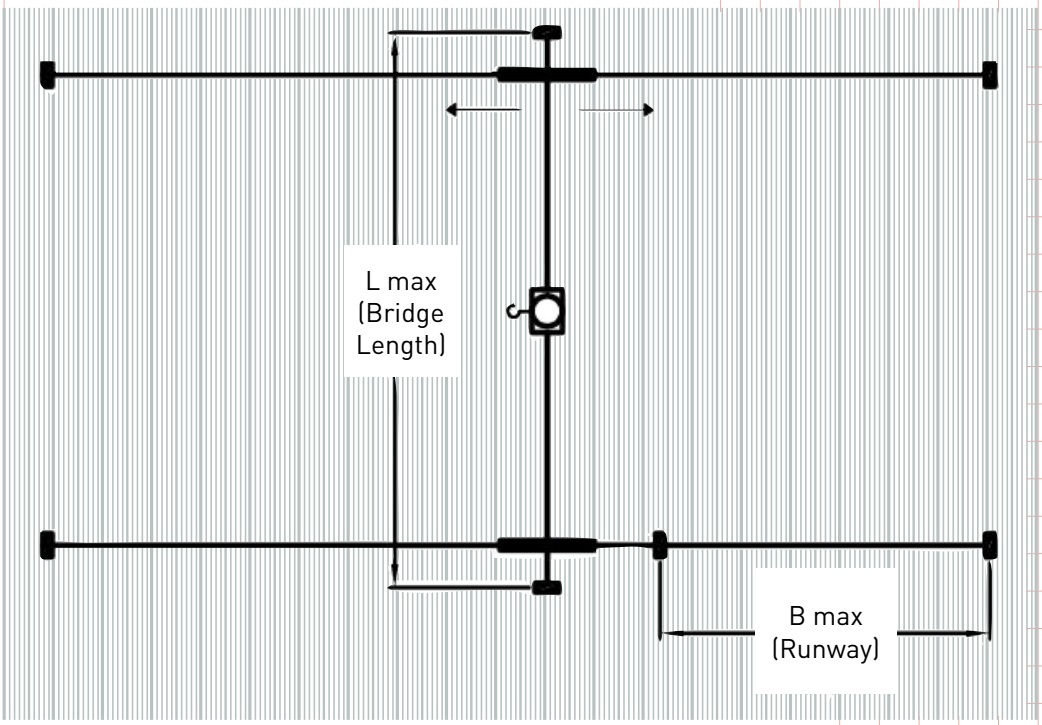

Capacity (Kg)	NIKO Profile No.	Bridge Length L max (m)	Runway supporting distance B max (m)
80	23.000	1.50	1,00
	23.030	4.00	3,50
125	24.000	1.80	1,40
	24.030	5.00	4,40
	24.031	6.00	5,20
	24.080	7.00	6,40
	24.045	9.00	8,00
250	25.000	2.50	1,80
	25.030	6.00	5,20
	25.080	8,00	7,00
	25.045	10,00	9,00
500	26.000	2,50	1,80
	26.030	6,00	5,20
	26.080	8,00	7,00
	26.045	10,00	9,00
750	26.000	1,80	1,00
	26.031	6,00	5,00
	26.081	8,00	7,00
	26.045	10,00	9,00
1000	27.000	3,00	2,00
	27.030	6,00	5,00
	27.080	8,00	7,00
	27.045	10,00	9,00
1600	27.000	1,50	1,00
	27.030	3,50	2,70
	27.080	6,00	5,00
	27.045	10,00	9,00
2000	27.080	5,00	4,00
	27.045	10,00	8,00

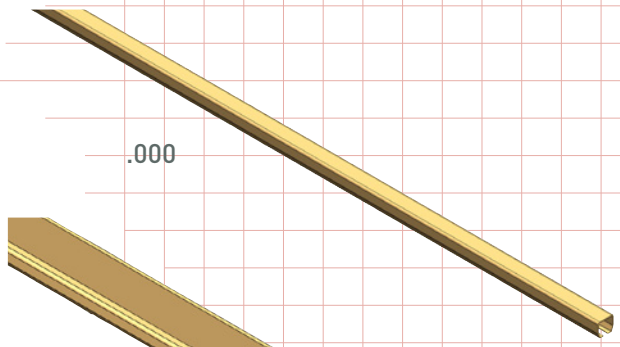

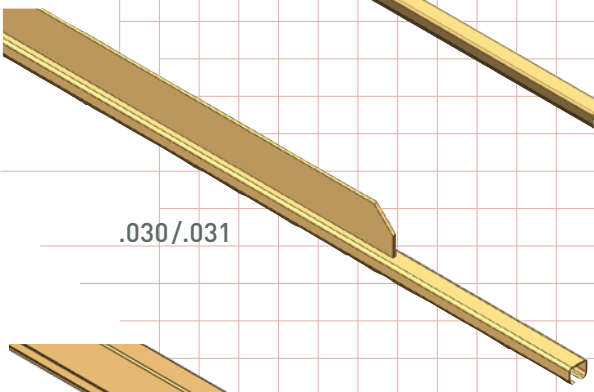

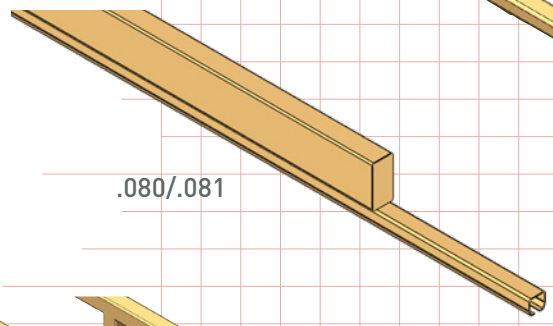

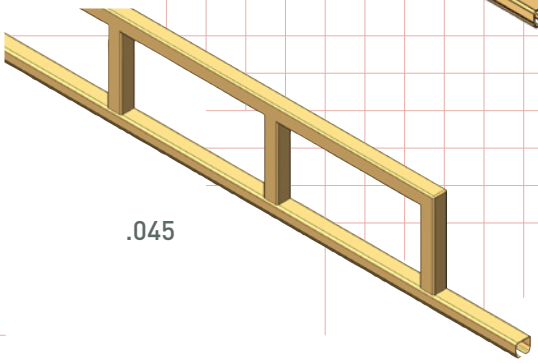

NIKO Stainless steel crane - Series 304/316

NIKO stainless steel light cranes are used in industries like pharmaceutical and fine chemical industries. They are also being applied in corrosive environments, or in areas that are frequently washed or disinfected (such as in food processing).

STAINLESS STEEL 304

STAINLESS STEEL 316

- ✓ For loads up to 500kg
- ✓ 4 different NIKO profiles
- ✓ Custom engineered solutions

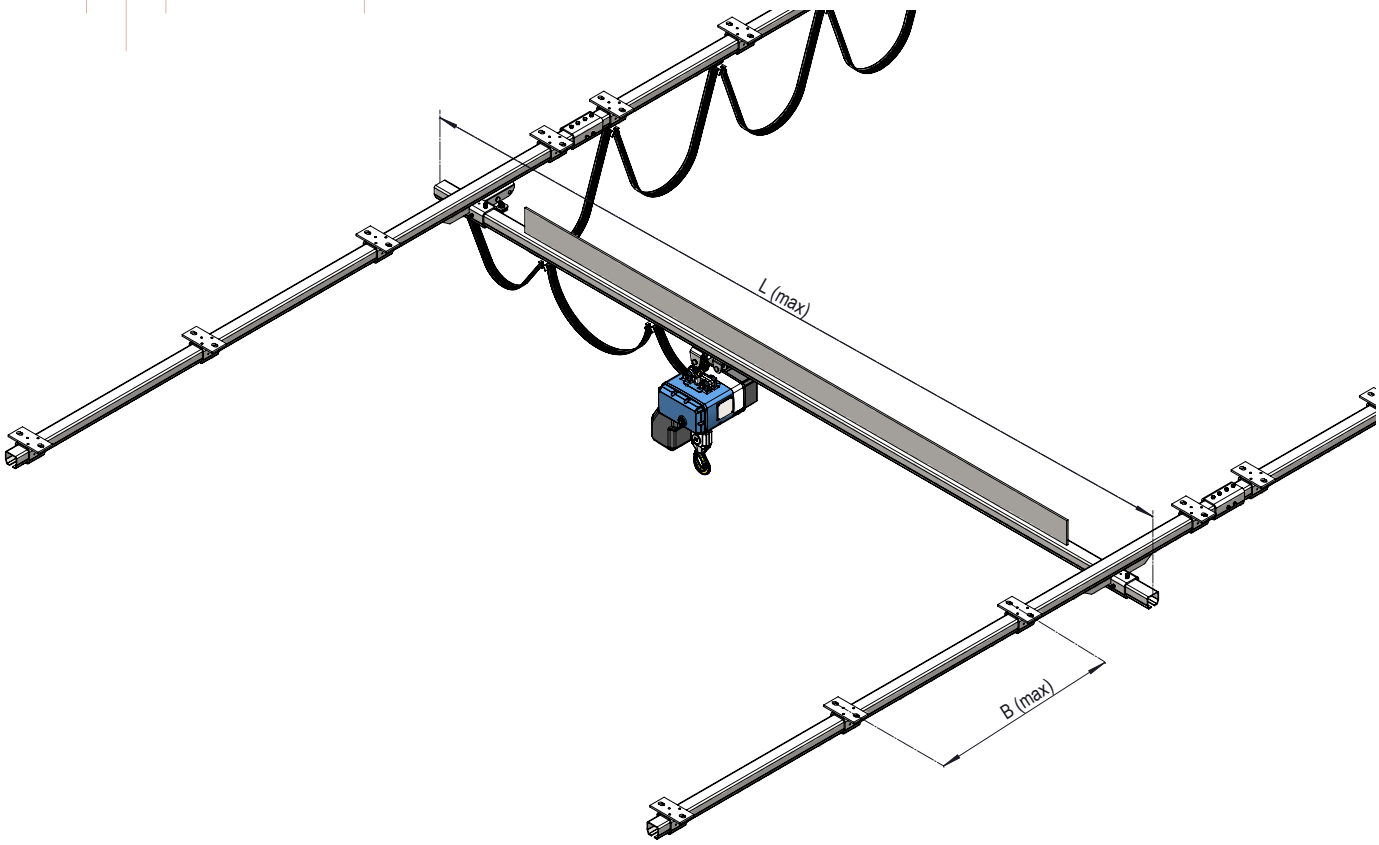

Capacity (Kg)	NIKO Profile No. Series 304	NIKO Profile No. Series 316	Bridge Length L max (m)	Long travel supporting distance B max (m)
80	23.050	23.070	1.50	1.00
	53.030	73.030	4.00	3.50
125	24.050	24.070	1.80	1.40
	54.030	74.030	5.00	4.40
	54.031	74.031	6.00	5.20
	54.080	74.080	7.00	6.40
	54.045	74.045	9.00	8.00
250	25.050	25.070	2.50	1.80
	55.030	75.030	6.00	5.20
	55.080	75.080	8.00	7.00
	55.045	75.045	10.00	9.00
500	Available upon request with reinforced tracks and carriages			

NIKO Aluminium Crane

The perfect alternative to every light material handling need!

The light weight and the robust design of our aluminium crane offer an easy installation and a weightless feel of the load during the movement.

- ✓ Lower noise level during operation.
- ✓ High corrosion resistance
- ✓ Low dead weight of profiles – easier installation.
- ✓ Suitable for installation in harsh environments.

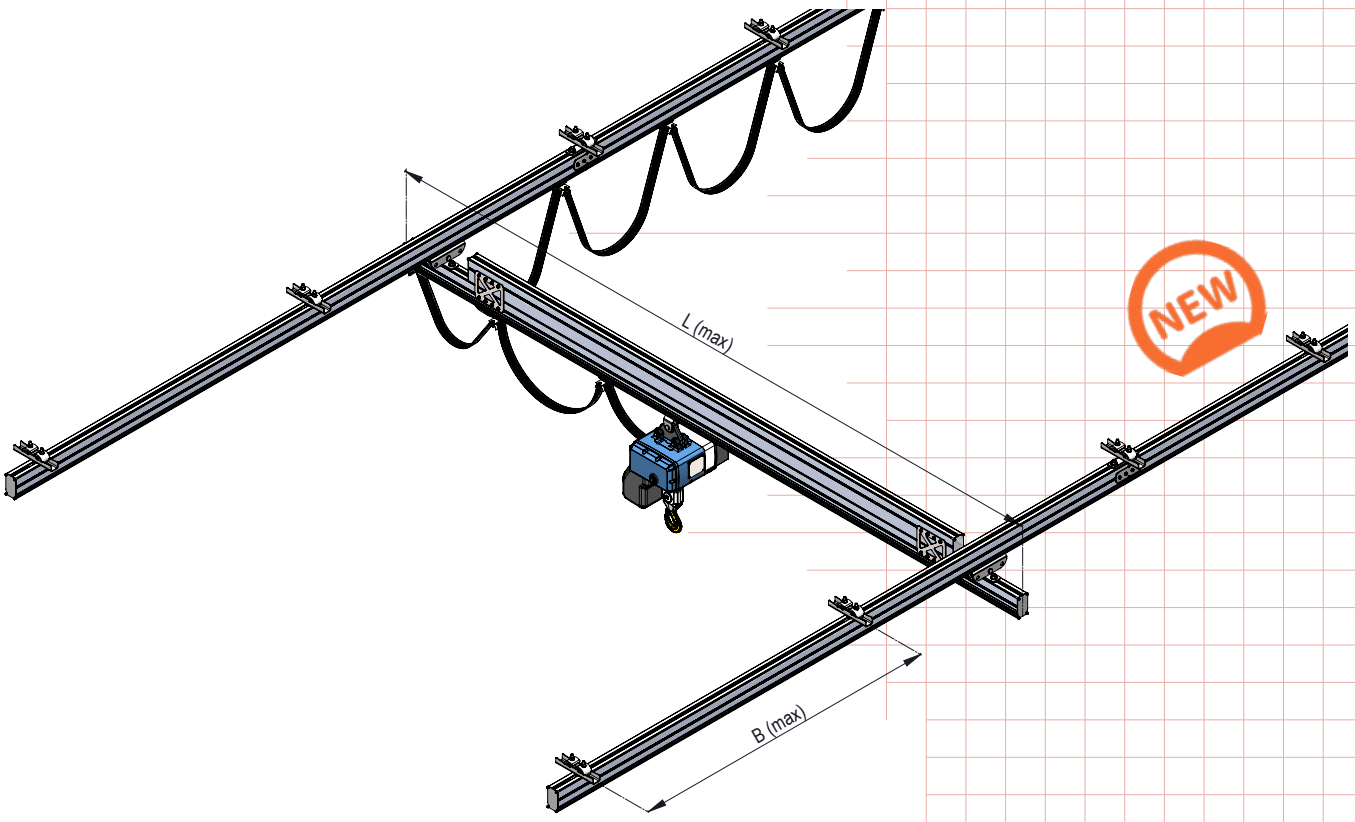

Capacity (Kg)	NIKO Profile No.	Bridge Length L max (m)	Long travel supporting distance B max (m)
125	45.000	4.8	4
	45.000 + 45.080	7.4	6.7
250	45.000	3.7	3.0
	45.000 + 45.080	6.4	5.7
500*			

***500kg** *Capacity will be available soon.*
Please contact us for more information: info@niko.eu.com

NIKO Power Driven Trolleys

Light cranes and straight monorails can be electrically driven using our power driven trolleys (not to be used in bends). This is particularly useful for cranes that carry loads greater than 1000 Kg. The power driven trolley operates using 4 high quality friction wheels that ensure long life and accuracy of movement. Electric travel is possible in 3 options: Powered hoist trolley traveling across the bridge only (M 1), powered travel of the crane bridge only (M 2 + M 3) and powered travel in all directions (M 1 + M 2 + M 3). Our power driven trolleys have inverter controlled motors that allow soft start and soft stop travel.

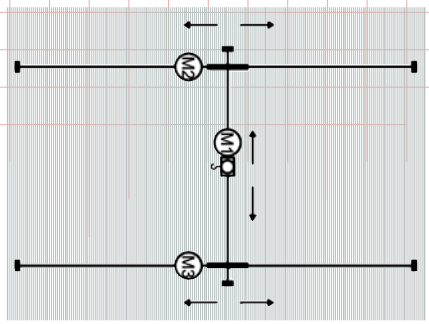

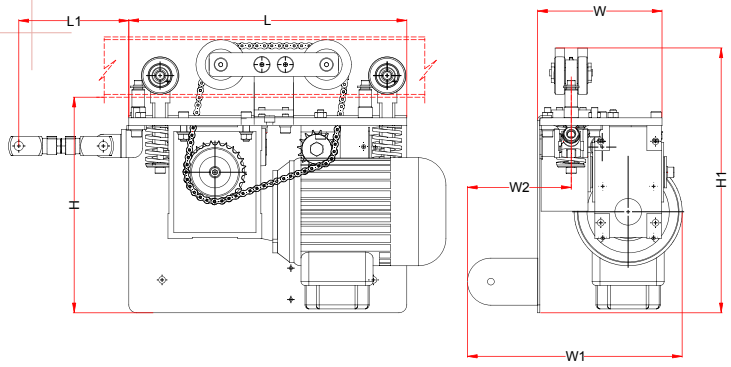

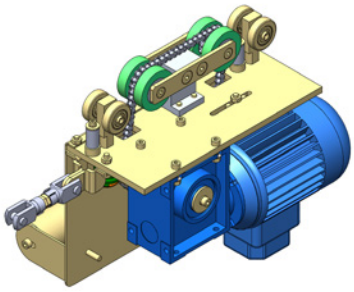

NIKO Profile No.	Power Driven Trolley	Transferred load (kg)	L (mm)	L1 (mm)	W (mm)	W1 (mm)	W2 (mm)	H (mm)	H1 (mm)
25.000	25.H120	500	355	145	160	260	142	275	332
26.000	26.H120	1000	355	145	160	260	142	276	347
27.000	27.H120	2000	355	180	160	260	142	277	380

NIKO telescopic cantilever crane and monorail

In order to cover a wider area than the supporting structure permits, telescopic cantilever monorails are available. Using our components telescopic cantilever cranes are also possible, which are often installed in containers, trucks and vans. This facilitates overhead lifting and loading from outside and into the vehicle.

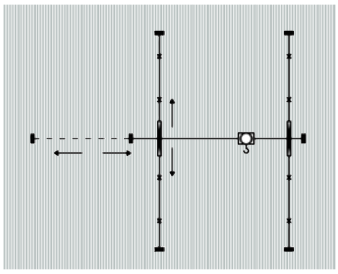

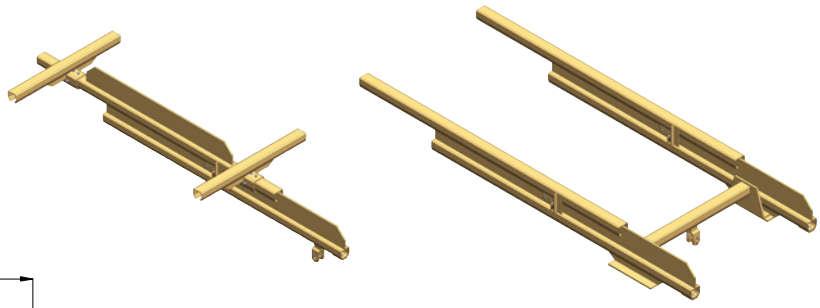

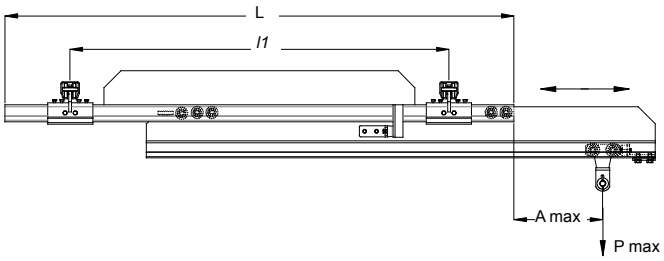

NIKO Profil No.	23.000	24.000	25.000	26.000	27.000
P max Kg	40	75	125	250	500
A max mm	1200	1200	1300	1300	1300

NIKO interlocks (Latching devices)

Interlocks (latching devices) are used to connect one crane with another crane and/or an overhead conveyor system. The load carrying trolley is transferred with safety from one system to the other.

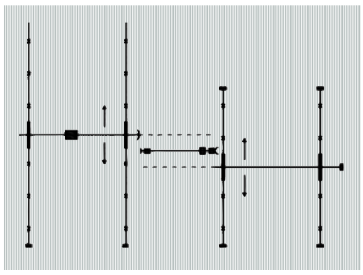

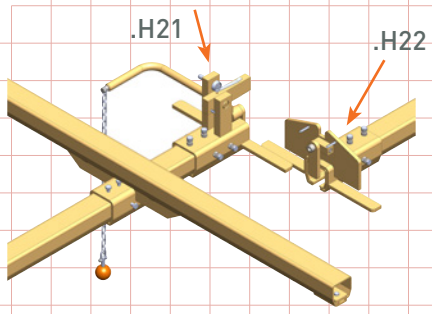

NIKO Monorails with switches & bends

NIKO conveyor systems can be used in a variety of applications utilising more than 2.000 components such as switches and turn tables.

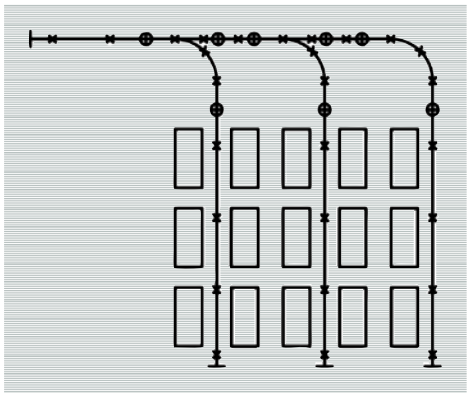

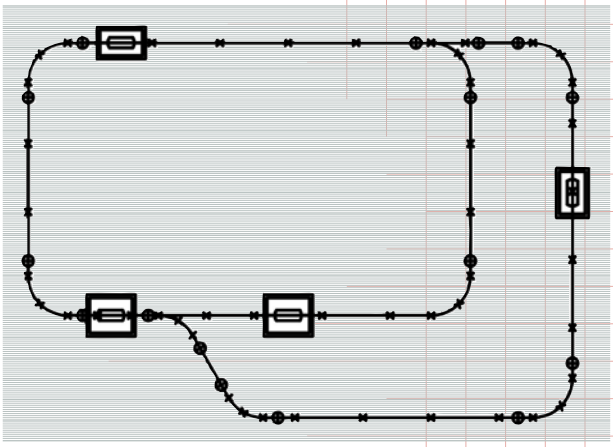

NIKO Jib Cranes

Utilising our enclosed Profiles we produce high quality and low cost jib cranes suitable for wall/ column mounting or freestanding. Our standard range covers 180 to 270 for capacities of up to 1.000 kg. Our jib crane kits come complete with a trolley for load suspension and the appropriate cable/hose trolleys.

Our enclosed profile design offers ease of use and minimal pulling/pushing force in the operation of the jib cranes. This is critical for the ergonomic operation of the jib crane to minimise potential strain on the user.

Weight (Kg)	NIKO Jib Crane Art no.	L (mm)	Niko Profil No.	H (mm)
80	24.J052	2000	24.000	500
	24.J053	3000	24.000	500
	24.J064	4000	24.000	600
	25.J095	5000	25.000	900
	25.J106	6000	25.000	1000
125	25.J052	2000	25.000	500
	25.J053	3000	25.000	500
	25.J064	4000	25.000	600
	25.J095	5000	25.000	900
	25.J106	6000	25.000	1000
250	25.J052	2000	25.000	500
	25.J063	3000	25.000	600
	25.J084	4000	25.000	800
	26.J095	5000	26.000	900
	26.J106	6000	26.000	1000
500	26.J082	2000	26.000	800
	26.J083	3000	26.000	800
	26.J094	4000	26.000	900
	27.J105	5000	27.000	1000
	27.J116	6000	27.000	1100
1000	27.J092	2000	27.000	900
	27.J093	3000	27.000	900
	27.J104	4000	27.000	1000

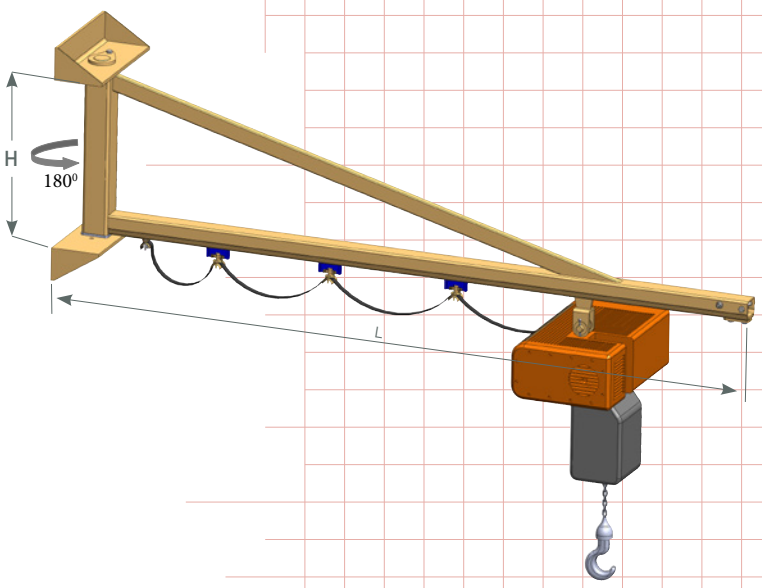

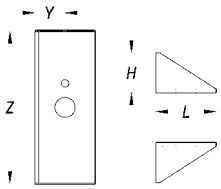

NIKO Profile No.	24.000
Wall Mounting Bracket Kit No	24.B90
H (mm)	100
L (mm)	150
Y (mm)	75
Z (mm)	380

AUSTRIA-NIKO Vertriebs GmbH
Hainfelder Straße 48
A - 2560 Berndorf
Tel. 0043 2672-21201
Fax 0043 2672-21201-13
office.at@niko.eu.com
www.niko.world

CHINA-NIKO TRADING (SHANGHAI) Co., Ltd
Room 901-156, No.18 TianShan Road,
ChangNing District, Shanghai,
P.R.China
Tel. 0086 158 0064 7160
info.cn@niko.eu.com

GERMANY-NIKO Technik GmbH
Robert-Bosch-Str. 14
DE – 42489 Wülfrath
Tel. 0049 (0) 2058 9093603
Fax 0049 (0) 2058 9093604
office.de@niko.eu.com

GREECE-Helm Hellas S.A.
82nd Km Athens-Korinthos
P.O. Box 209
GR - 201 00 KORINTHOS
Tel. 0030 27410 76800
Fax 0030 27410 25368
info@niko.eu.com

POLAND- NIKO Polska
Wojska Polskiego 65A
PL - Wielun 98-300
Tel. 0048 504 00 35 56
info.pl@niko.eu.com

UNITED KINGDOM-NIKO Ltd
Units 15-21, Insight Park
Welsh Road East, Southam
Warwickshire, CV47 1NE -UK
Tel. 0044 (0) 1926 813111
Fax 0044 (0) 1926 815599
Sales@niko.co.uk
www.niko.co.uk

USA-NIKO Track
300 Highpoint Ave
USA - Portsmouth, RI. 02871
Tel. 001 (0) 401 683 7525
Fax 001 (0) 401 293 3848
info@nikotrack.com
www.nikotrack.com

www.niko.eu.com www.niko.co.uk www.nikotrack.com www.niko.world

Your **NIKO** agent will be happy to advise you:

Complete **NIKO** product range:

- LIGHT DUTY SLIDING DOOR HARDWARE
- HEAVY DUTY SLIDING DOOR HARDWARE
- CONVEYOR SYSTEMS
- LIGHT CRANES
- CABLE TROLLEYS, FESTOON SYSTEMS & CONDUCTOR BARS
- PERSONAL FALL ARREST SYSTEMS (EN 795)
- ACCESSORIES FOR GATES AND DOORS

Copyright NIKO (Version February 2019)
We take no obligation for layout, composition, technical modifications as well as misprints.